2 BIKE RV RACK
Bumper Mount

ITEM: 80605

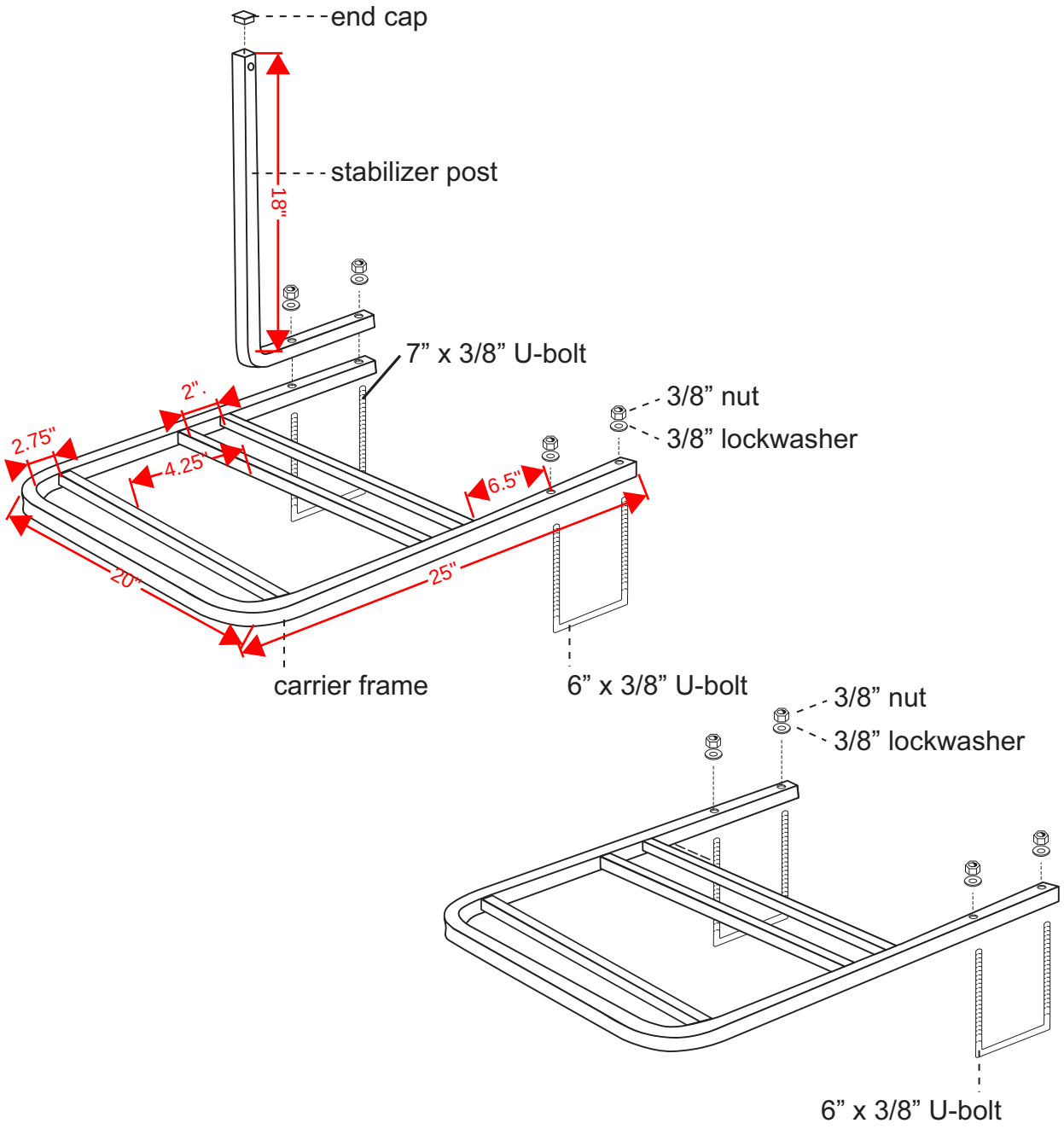

Danik Industries Ltd.
300 - 1880 Government St.
Penticton, B.C. V2A 7J1

swagman®

Phone (250) 490-8883
Fax (250) 490-8885
www.swagman.net